Work Order ID 108348

October-16-13 10:34:38 AM

108348

Item ID: D3391-025 **Accept** *N900040100* **Setup Start** *NS1*

Revision ID: **Stop** *NS2*

Item Name: Aft Tube Assembly

Start Date: 10/16/13 **Start Qty:** 1.00 *1* **Cust Item ID:**

Required Date: 10/30/13 **Req'd Qty:** 1.00 *1* **Customer:**

Reference:

Run Start *NR1*

Stop *NR2*

Approvals: **Process Plan:** MLS **Date:** 13-10-16 **Tooling:** _____ **Date:** _____

QC: _____ **Date:** _____ **SPC (Y/N):** _____ **Date:** _____

Sequence ID/ Work Center ID	Operation Description	Set Up/ Run Hours	Tool ID	Tool #	Plan Code	Accept Qty	Reject Qty	Reject Number	Insp. Stamp
Draw Nbr	**Revision Nbr**								
D3391	J								
100		0.00				1	0		
100	MORI SEIKI CNC LATHE LARGE								
Mori Seiki	**Memo**	0.00							
Mori Seiki CNC Lathe Large	Turn as per Folio FA599 Rev: A & Dwg D3391 Rev: A								13/10/20
	scribe batch # on fwd end at 90 degree								
110	QC2- Inspect parts off machine FAI/FAIB	0.00				1	0		
110									
QC	**Memo**	0.00							
Quality Control									13/10/20
112	QC5- Inspect part completeness to step on W/O	0.00				1			
112									
QC	**Memo**	0.00							
Quality Control									

DAS 27 9-89

13/10/22

DQA: _____ Date: _____

NCR: Yes / No

WORK ORDER NON-CONFORMANCE / UPDATE

QA Closed: Date:

Work Order: _____

Part No. _____

NCR No. _____

DISPOSITION

- Rework ☐
- Scrap ☐
- Use-as-is ☐
- Work Order Update ☐

AGAINST DEPARTMENT/PROCESS

- Skid-tube ☐
- Machining ☐
- Thermoforming ☐
- Large Fab ☐
- Crosstube ☐
- Small Fab ☐
- Finishing ☐
- Composite ☐
- Water Jet ☐
- Prod. Eng. Coor. ☐
- Rec/Store/Packaging ☐
- Supplier ☐
- Engineering ☐
- Quality ☐
- Other ☐
- ☐

Root Cause		Date	Step	Qty	Description of work order update or Non-conformance	Initial Chief Eng	Action Description	Sign & Date	Verification	QC Inspector
Doc/Data										
Equip/Tooling										
Operator										
Material										
Setup										
Other										
Process										
Supplier										
Training										
Unapproved										

FAULT CATEGORY

Landing Gear

- ☐ Bending
- ☐ Centre Not Concentric to O/S
- ☐ Cracks
- ☐ Crushed/Crimped
- ☐ Cuffs
- ☐ Heat Treat
- ☐ Inspection Strip in Tube
- ☐ Ripples in Bend
- ☐ Torque Waves in Extrusion
- ☐ Turning Sequence
- ☐ Wave/Twist in Tube

General

- ☐ Bend
- ☐ BOM/Route
- ☐ Broken/Damaged
- ☐ Burrs
- ☐ Contamination
- ☐ Countersink
- ☐ Cut Too Short
- ☐ Drill Holes
- ☐ Drawing
- ☐ Finish
- ☐ Folio
- ☐ Grain
- ☐ Hardware
- ☐ Inspection Incomplete
- ☐ Instructions Incomplete/Unclear
- ☐ Maintenance
- ☐ Mislabeled
- ☐ Misread
- ☐ Offset
- ☐ Out of Calibration
- ☐ Out of Sequence
- ☐ Outside Dimensions
- ☐ Ovalized
- ☐ Over/Under tolerance
- ☐ Part Incorrect
- ☐ Part Lost/Missing
- ☐ Part Moved
- ☐ Positioned Wrong
- ☐ Power Loss/Surge
- ☐ Pressure/Forced
- ☐ Temperature/Cure
- ☐ Weld
- ☐ Wrong Stock Pulled
- ☐ Other _____

Item ID: D3391-025 **Accept** *N900040100* **Setup Start** *NS1*
Revision ID: **Stop** *NS2*
Item Name: Aft Tube Assembly

Start Date: 10/16/13 **Start Qty:** 1.00 *1* **Cust Item ID:**
Required Date: 10/30/13 **Req'd Qty:** 1.00 *1* **Customer:**
Reference:

Run Start *NR1*
Stop *NR2*

Approvals: **Process Plan:** _____ **Date:** _____ **Tooling:** _____ **Date:** _____
QC: _____ **Date:** _____ **SPC (Y/N):** _____ **Date:** _____

Sequence ID/ Work Center ID	Operation Description	Set Up/ Run Hours	Tool ID	Tool #	Plan Code	Accept Qty	Reject Qty	Reject Number	Insp. Stamp
120		0.00							
120	HAAS CNC VERTICAL MACHINING #1					1			JL 13-11-1
HAAS 1	**Memo**	0.00							
HAAS CNC vertical machine #1	1-Machine as per Folio FA 599 Rev: AA & Dwg D3391 Rev: 1 2-Deburr								
130	QC2- Inspect parts off machine FAI/FAIB	0.00							
130									JL 13-11-1
QC	**Memo**	0.00							
Quality Control									
140	QC8- Inspect parts - second check	0.00							
140			DAS 40 8-89	13/11/04		1	Ø		
QC	**Memo**	0.00							
Quality Control	***INSPECT INSIDE BORE***								

DQA: _____ Date: _____

NCR: Yes / No

WORK ORDER NON-CONFORMANCE / UPDATE

QA Closed: Date:

Work Order: _____

Part No. _____

NCR No. _____

DISPOSITION

- Rework ☐
- Scrap ☐
- Use-as-is ☐
- Work Order Update ☐

AGAINST DEPARTMENT/PROCESS

- Skid-tube ☐
- Machining ☐
- Thermoforming ☐
- Large Fab ☐
- Crosstube ☐
- Small Fab ☐
- Finishing ☐
- Composite ☐
- Water Jet ☐
- Prod. Eng. Coor. ☐
- Rec/Store/Packaging ☐
- Supplier ☐
- Engineering ☐
- Quality ☐
- Other ☐
- ☐

Root Cause		Date	Step	Qty	Description of work order update or Non-conformance	Initial Chief Eng	Action Description	Sign & Date	Verification	QC Inspector
Doc/Data	☐									
Equip/Tooling	☐									
Operator	☐									
Material	☐									
Setup	☐									
Other	☐									
Process	☐									
Supplier	☐									
Training	☐									
Unapproved	☐									

FAULT CATEGORY

Landing Gear

- ☐ Bending
- ☐ Centre Not Concentric to O/S
- ☐ Cracks
- ☐ Crushed/Crimped
- ☐ Cuffs
- ☐ Heat Treat
- ☐ Inspection Strip in Tube
- ☐ Ripples in Bend
- ☐ Torque Waves in Extrusion
- ☐ Turning Sequence
- ☐ Wave/Twist in Tube

General

- ☐ Bend
- ☐ BOM/Route
- ☐ Broken/Damaged
- ☐ Burrs
- ☐ Contamination
- ☐ Countersink
- ☐ Cut Too Short
- ☐ Drill Holes
- ☐ Drawing
- ☐ Finish
- ☐ Folio
- ☐ Grain
- ☐ Hardware
- ☐ Inspection Incomplete
- ☐ Instructions Incomplete/Unclear
- ☐ Maintenance
- ☐ Mislabeled
- ☐ Misread
- ☐ Offset
- ☐ Out of Calibration
- ☐ Out of Sequence
- ☐ Outside Dimensions
- ☐ Ovalized
- ☐ Over/Under tolerance
- ☐ Part Incorrect
- ☐ Part Lost/Missing
- ☐ Part Moved
- ☐ Positioned Wrong
- ☐ Power Loss/Surge
- ☐ Pressure/Forced
- ☐ Temperature/Cure
- ☐ Weld
- ☐ Wrong Stock Pulled
- ☐ Other

_____

_____

_____

Item ID: D3391-025 **Accept** *N900040100* **Setup Start** *NS1*
Revision ID: **Stop** *NS2*
Item Name: Aft Tube Assembly
Start Date: 10/16/13 **Start Qty:** 1.00 *1*
Required Date: 10/30/13 **Req'd Qty:** 1.00 *1*
Reference:
Cust Item ID:
Customer:

Approvals: **Process Plan:** _____ **Date:** _____ **Tooling:** _____ **Date:** _____
QC: _____ **Date:** _____ **SPC (Y/N):** _____ **Date:** _____

Run Start *NR1*
Stop *NR2*

Sequence ID/ Work Center ID	Operation Description	Set Up/ Run Hours	Tool ID	Tool #	Plan Code	Accept Qty	Reject Qty	Reject Number	Insp. Stamp
150		0.00							
150	Skidtubes					mm	13/11/04		
Skidtubes	**Memo**	0.00							
Skidtubes	1-Drill (PILOT HOLE) aft cap holes per Dwg D3391 using DT8803								
160		0.00							
160	BENDING MACHINE - SKIDTUBES								
CNC Bend 1	**Memo**	0.00							
CNC Delta 100 Bender	Form as per Dwg D3391 Using Bend Prog 3391025						- DC13/11/05		
170	QC5- Inspect part completeness to step on W/O	0.00							
170									
QC	**Memo**	0.00							
Quality Control									

4/25"

DC 13-11-5

DQA: _____ Date: _____

NCR: Yes / No

WORK ORDER NON-CONFORMANCE / UPDATE

QA Closed: Date:

Work Order: _____

Part No. _____

NCR No. _____

DISPOSITION

Rework ☐
Scrap ☐
Use-as-is ☐
Work Order Update ☐

AGAINST DEPARTMENT/PROCESS

Skid-tube ☐ Crosstube ☐ Water Jet ☐ Engineering ☐
Machining ☐ Small Fab ☐ Prod. Eng. Coor. ☐ Quality ☐
Thermoforming ☐ Finishing ☐ Rec/Store/Packaging ☐ Other ☐
Large Fab ☐ Composite ☐ Supplier ☐

Root Cause		Date	Step	Qty	Description of work order update or Non-conformance	Initial Chief Eng	Action Description	Sign & Date	Verification	QC Inspector
Doc/Data	☐									
Equip/Tooling	☐									
Operator	☐									
Material	☐									
Setup	☐									
Other	☐									
Process	☐									
Supplier	☐									
Training	☐									
Unapproved	☐									

FAULT CATEGORY

Landing Gear

☐ Bending
☐ Centre Not Concentric to O/S
☐ Cracks
☐ Crushed/Crimped
☐ Cuffs
☐ Heat Treat
☐ Inspection Strip in Tube
☐ Ripples in Bend
☐ Torque Waves in Extrusion
☐ Turning Sequence
☐ Wave/Twist in Tube

General

☐ Bend
☐ BOM/Route
☐ Broken/Damaged
☐ Burrs
☐ Contamination
☐ Countersink
☐ Cut Too Short
☐ Drill Holes
☐ Drawing
☐ Finish
☐ Folio
☐ Grain
☐ Hardware
☐ Inspection Incomplete
☐ Instructions Incomplete/Unclear
☐ Maintenance
☐ Mislabeled
☐ Misread
☐ Offset
☐ Out of Calibration
☐ Out of Sequence
☐ Outside Dimensions
☐ Ovalized
☐ Over/Under tolerance
☐ Part Incorrect
☐ Part Lost/Missing
☐ Part Moved
☐ Positioned Wrong
☐ Power Loss/Surge
☐ Pressure/Forced
☐ Temperature/Cure
☐ Weld
☐ Wrong Stock Pulled
☐ Other

_____
_____
_____

Work Order ID 108348

108348

October-16-13 10:34:38 AM

Item ID: D3391-025 **Accept** *N900040100* **Setup Start** *NS1*

Revision ID: **Stop** *NS2*

Item Name: Aft Tube Assembly

Start Date: 10/16/13 **Start Qty:** 1.00 *1*

Required Date: 10/30/13 **Req'd Qty:** 1.00 *1*

Reference:

Cust Item ID:

Customer:

Run Start *NR1*

Stop *NR2*

Approvals: **Process Plan:** _____ **Date:** _____ **Tooling:** _____ **Date:** _____

QC: _____ **Date:** _____ **SPC (Y/N):** _____ **Date:** _____

Sequence ID/ Work Center ID	Operation Description	Set Up/ Run Hours	Tool ID	Tool #	Plan Code	Accept Qty	Reject Qty	Reject Number	Insp. Stamp
180		0.00							
180	Skidtubes								
Skidtubes		0.00							
Skidtubes									

Memo

1. Open Aft cap pilot hole to .208" as per Dwg D3391

2. Drill float bag holes using DT8809 as per Dwg D3391(Holes marked "A" Only.

3. Drill wearplate holes as per Dwg D3391 using DT8878(Mid Tube) & DT8217 Wearplate Jig .
*****Do Not Open To Finished Size*****

4. Drill Wearshoe holes as per DWG D3391 using DT8939 locating from 2 previously drilled aft wearplate holes.

5. Open wearplate holes to 0.250" and c'bore as per dwg D3391

6. Open up all wearshoe , wearplate to 0.297"and float bag holes to 0.328" as per Dwg D3391.

7. Deburr

mm 13/11/18

DQA: _____ Date: _____

NCR: Yes / No

WORK ORDER NON-CONFORMANCE / UPDATE

QA Closed: Date:

Work Order: _____

Part No. _____

NCR No. _____

DISPOSITION

- Rework ☐
- Scrap ☐
- Use-as-is ☐
- Work Order Update ☐

AGAINST DEPARTMENT/PROCESS

- Skid-tube ☐
- Machining ☐
- Thermoforming ☐
- Large Fab ☐
- Crosstube ☐
- Small Fab ☐
- Finishing ☐
- Composite ☐
- Water Jet ☐
- Prod. Eng. Coor. ☐
- Rec/Store/Packaging ☐
- Supplier ☐
- Engineering ☐
- Quality ☐
- Other ☐
- ☐

Root Cause		Date	Step	Qty	Description of work order update or Non-conformance	Initial Chief Eng	Action Description	Sign & Date	Verification	QC Inspector
Doc/Data	☐									
Equip/Tooling	☐									
Operator	☐									
Material	☐									
Setup	☐									
Other	☐									
Process	☐									
Supplier	☐									
Training	☐									
Unapproved	☐									

FAULT CATEGORY

Landing Gear

- ☐ Bending
- ☐ Centre Not Concentric to O/S
- ☐ Cracks
- ☐ Crushed/Crimped
- ☐ Cuffs
- ☐ Heat Treat
- ☐ Inspection Strip in Tube
- ☐ Ripples in Bend
- ☐ Torque Waves in Extrusion
- ☐ Turning Sequence
- ☐ Wave/Twist in Tube

General

- ☐ Bend
- ☐ BOM/Route
- ☐ Broken/Damaged
- ☐ Burrs
- ☐ Contamination
- ☐ Countersink
- ☐ Cut Too Short
- ☐ Drill Holes
- ☐ Drawing
- ☐ Finish
- ☐ Folio
- ☐ Grain
- ☐ Hardware
- ☐ Inspection Incomplete
- ☐ Instructions Incomplete/Unclear
- ☐ Maintenance
- ☐ Mislabeled
- ☐ Misread
- ☐ Offset
- ☐ Out of Calibration
- ☐ Out of Sequence
- ☐ Outside Dimensions
- ☐ Ovalized
- ☐ Over/Under tolerance
- ☐ Part Incorrect
- ☐ Part Lost/Missing
- ☐ Part Moved
- ☐ Positioned Wrong
- ☐ Power Loss/Surge
- ☐ Pressure/Forced
- ☐ Temperature/Cure
- ☐ Weld
- ☐ Wrong Stock Pulled
- ☐ Other

_____

_____

_____

Item ID: D3391-025 **Accept** *N900040100* **Setup Start** *NS1*
Revision ID: **Stop** *NS2*
Item Name: Aft Tube Assembly
Start Date: 10/16/13 **Start Qty:** 1.00 *1* **Cust Item ID:**
Required Date: 10/30/13 **Req'd Qty:** 1.00 *1* **Customer:**
Reference:

Run Start *NR1*
Stop *NR2*

Approvals: **Process Plan:** _____ **Date:** _____ **Tooling:** _____ **Date:** _____
QC: _____ **Date:** _____ **SPC (Y/N):** _____ **Date:** _____

Sequence ID/ Work Center ID	Operation Description	Set Up/ Run Hours	Tool ID	Tool #	Plan Code	Accept Qty	Reject Qty	Reject Number	Insp. Stamp
190	QC5- Inspect part completeness to step on W/O	0.00						DAS 9 9-89	
190						13-11-18			
QC	**Memo**	0.00							
Quality Control									
200	Chemical Conversion Coat per QSI005 4.1	0.00							
200						13-11-19		DGL/MM	
HandFinish	**Memo**	0.00							
Hand Finishing									
210	QC7-Inspect Chemical Conversion Coat	0.00							
210						13-11-21			
QC	**Memo**	0.00							
Quality Control									

DQA: _____ Date: _____

NCR: Yes / No

WORK ORDER NON-CONFORMANCE / UPDATE

QA Closed: Date:

Work Order: _____

Part No. _____

NCR No. _____

DISPOSITION

Rework ☐
Scrap ☐
Use-as-is ☐
Work Order Update ☐

AGAINST DEPARTMENT/PROCESS

Skid-tube ☐ Crosstube ☐ Water Jet ☐ Engineering ☐
Machining ☐ Small Fab ☐ Prod. Eng. Coor. ☐ Quality ☐
Thermoforming ☐ Finishing ☐ Rec/Store/Packaging ☐ Other ☐
Large Fab ☐ Composite ☐ Supplier ☐

Root Cause		Date	Step	Qty	Description of work order update or Non-conformance	Initial Chief Eng	Action Description	Sign & Date	Verification	QC Inspector
Doc/Data	☐									
Equip/Tooling	☐									
Operator	☐									
Material	☐									
Setup	☐									
Other	☐									
Process	☐									
Supplier	☐									
Training	☐									
Unapproved	☐									

FAULT CATEGORY

Landing Gear

☐ Bending
☐ Centre Not Concentric to O/S
☐ Cracks
☐ Crushed/Crimped
☐ Cuffs
☐ Heat Treat
☐ Inspection Strip in Tube
☐ Ripples in Bend
☐ Torque Waves in Extrusion
☐ Turning Sequence
☐ Wave/Twist in Tube

General

☐ Bend
☐ BOM/Route
☐ Broken/Damaged
☐ Burrs
☐ Contamination
☐ Countersink
☐ Cut Too Short
☐ Drill Holes
☐ Drawing
☐ Finish
☐ Folio
☐ Grain
☐ Hardware
☐ Inspection Incomplete
☐ Instructions Incomplete/Unclear
☐ Maintenance
☐ Mislabeled
☐ Misread
☐ Offset
☐ Out of Calibration
☐ Out of Sequence
☐ Outside Dimensions
☐ Ovalized
☐ Over/Under tolerance
☐ Part Incorrect
☐ Part Lost/Missing
☐ Part Moved
☐ Positioned Wrong
☐ Power Loss/Surge
☐ Pressure/Forced
☐ Temperature/Cure
☐ Weld
☐ Wrong Stock Pulled
☐ Other

_____
_____
_____

Item ID: D3391-025 **Accept** *N900040100* **Setup Start** *NS1*
Revision ID: **Stop** *NS2*
Item Name: Aft Tube Assembly

Start Date: 10/16/13 **Start Qty:** 1.00 *1*
Required Date: 10/30/13 **Req'd Qty:** 1.00 *1*
Reference:

Cust Item ID:
Customer:

Run Start *NR1*
Stop *NR2*

Approvals: **Process Plan:** _____ **Date:** _____ **Tooling:** _____ **Date:** _____
QC: _____ **Date:** _____ **SPC (Y/N):** _____ **Date:** _____

Sequence ID/ Work Center ID	Operation Description	Set Up/ Run Hours	Tool ID	Tool #	Plan Code	Accept Qty	Reject Qty	Reject Number	Insp. Stamp
220		0.00							
220	Skidtubes								
Skidtubes	**Memo**	0.00							
Skidtubes	Instal spacers as per dwg D3391 A/R Magnabond 6398 Batch: 127227 exp. date : 14/05/05 cure time 12hrs as per QSI0015								
230	QC5- Inspect part completeness to step on W/O	0.00							DAS 27 9-89
230									
QC	**Memo**	0.00							13/11/22
Quality Control									
235	Pressure Wash per QSI005 4.3	0.00							
235									
HandFinish	**Memo**	0.00							
Hand Finishing	AND REALODINE AS PER PAR09-043								

- De 13/11/21

1 13-11-28

DQA: _____ Date: _____

NCR: Yes / No

WORK ORDER NON-CONFORMANCE / UPDATE

QA Closed: Date:

Work Order: _____

Part No. _____

NCR No. _____

DISPOSITION

- Rework ☐
- Scrap ☐
- Use-as-is ☐
- Work Order Update ☐

AGAINST DEPARTMENT/PROCESS

- Skid-tube ☐
- Machining ☐
- Thermoforming ☐
- Large Fab ☐
- Crosstube ☐
- Small Fab ☐
- Finishing ☐
- Composite ☐
- Water Jet ☐
- Prod. Eng. Coor. ☐
- Rec/Store/Packaging ☐
- Supplier ☐
- Engineering ☐
- Quality ☐
- Other ☐

Root Cause		Date	Step	Qty	Description of work order update or Non-conformance	Initial Chief Eng	Action Description	Sign & Date	Verification	QC Inspector
Doc/Data	☐									
Equip/Tooling	☐									
Operator	☐									
Material	☐									
Setup	☐									
Other	☐									
Process	☐									
Supplier	☐									
Training	☐									
Unapproved	☐									

FAULT CATEGORY

Landing Gear

- ☐ Bending
- ☐ Centre Not Concentric to O/S
- ☐ Cracks
- ☐ Crushed/Crimped
- ☐ Cuffs
- ☐ Heat Treat
- ☐ Inspection Strip in Tube
- ☐ Ripples in Bend
- ☐ Torque Waves in Extrusion
- ☐ Turning Sequence
- ☐ Wave/Twist in Tube

General

- ☐ Bend
- ☐ BOM/Route
- ☐ Broken/Damaged
- ☐ Burrs
- ☐ Contamination
- ☐ Countersink
- ☐ Cut Too Short
- ☐ Drill Holes
- ☐ Drawing
- ☐ Finish
- ☐ Folio
- ☐ Grain
- ☐ Hardware
- ☐ Inspection Incomplete
- ☐ Instructions Incomplete/Unclear
- ☐ Maintenance
- ☐ Mislabeled
- ☐ Misread
- ☐ Offset
- ☐ Out of Calibration
- ☐ Out of Sequence
- ☐ Outside Dimensions
- ☐ Ovalized
- ☐ Over/Under tolerance
- ☐ Part Incorrect
- ☐ Part Lost/Missing
- ☐ Part Moved
- ☐ Positioned Wrong
- ☐ Power Loss/Surge
- ☐ Pressure/Forced
- ☐ Temperature/Cure
- ☐ Weld
- ☐ Wrong Stock Pulled
- ☐ Other

_____

_____

_____

Work Order ID 108348 *108348*

October-16-13 10:34:38 AM

Item ID: D3391-025 **Accept** *N900040100* **Setup Start** *NS1*

Revision ID:

Item Name: Aft Tube Assembly **Stop** *NS2*

Start Date: 10/16/13 **Start Qty:** 1.00 *1* **Cust Item ID:**

Required Date: 10/30/13 **Req'd Qty:** 1.00 *1* **Customer:**

Reference:

Run Start *NR1*

Approvals: **Process Plan:** _____ **Date:** _____ **Tooling:** _____ **Date:** _____

QC: _____ **Date:** _____ **SPC (Y/N):** _____ **Date:** _____ **Stop** *NR2*

Sequence ID/ Work Center ID	Operation Description	Set Up/ Run Hours	Tool ID	Tool #	Plan Code	Accept Qty	Reject Qty	Reject Number	Insp. Stamp
240 *240* Powdercoat Powder Coating	White Gloss(Ref:4.3.5.1) per QSI005 4.3-Alum M126829	0.00				1	∅	13-12-21	
	Memo START TIME: 11:05 OVEN TEMPERATURE: 320° FINISH TIME: 11:35	0.00							
250 *250* QC Quality Control	QC3- Inspect Part Finish	0.00				1x	∅	[illegible]	13/12/18
	Memo	0.00							
260 *260* HandFinish Hand Finishing	HandFinishing	0.00				1x	∅	[illegible]	13/12/18
	Memo 1-Install inserts as per Dwg D3391 2-Install Aft Cap as per Dwg D3391 A/ R Sikaflex-241/-291 M 127317 Sikaflex expiry date: 11/08 3- INSTALL WEARPLATES AS PER DWG	0.00							

DAS 34 9-89

DQA: _____ Date: _____

NCR: Yes / No

WORK ORDER NON-CONFORMANCE / UPDATE

QA Closed: Date:

Work Order: _____

Part No. _____

NCR No. _____

DISPOSITION

Rework ☐
Scrap ☐
Use-as-is ☐
Work Order Update ☐

AGAINST DEPARTMENT/PROCESS

Skid-tube ☐ Crosstube ☐ Water Jet ☐ Engineering ☐
Machining ☐ Small Fab ☐ Prod. Eng. Coor. ☐ Quality ☐
Thermoforming ☐ Finishing ☐ Rec/Store/Packaging ☐ Other ☐
Large Fab ☐ Composite ☐ Supplier ☐ ☐

Root Cause		Date	Step	Qty	Description of work order update or Non-conformance	Initial Chief Eng	Action Description	Sign & Date	Verification	QC Inspector
Doc/Data	☐									
Equip/Tooling	☐									
Operator	☐									
Material	☐									
Setup	☐									
Other	☐									
Process	☐									
Supplier	☐									
Training	☐									
Unapproved	☐									

FAULT CATEGORY

Landing Gear

☐ Bending
☐ Centre Not Concentric to O/S
☐ Cracks
☐ Crushed/Crimped
☐ Cuffs
☐ Heat Treat
☐ Inspection Strip in Tube
☐ Ripples in Bend
☐ Torque Waves in Extrusion
☐ Turning Sequence
☐ Wave/Twist in Tube

General

☐ Bend
☐ BOM/Route
☐ Broken/Damaged
☐ Burrs
☐ Contamination
☐ Countersink
☐ Cut Too Short
☐ Drill Holes
☐ Drawing
☐ Finish
☐ Folio
☐ Grain
☐ Hardware
☐ Inspection Incomplete
☐ Instructions Incomplete/Unclear
☐ Maintenance
☐ Mislabeled
☐ Misread
☐ Offset
☐ Out of Calibration
☐ Out of Sequence
☐ Outside Dimensions
☐ Ovalized
☐ Over/Under tolerance
☐ Part Incorrect
☐ Part Lost/Missing
☐ Part Moved
☐ Positioned Wrong
☐ Power Loss/Surge
☐ Pressure/Forced
☐ Temperature/Cure
☐ Weld
☐ Wrong Stock Pulled
☐ Other

_____
_____
_____

Work Order ID 108348 *108348*

October-16-13 10:34:38 AM

Item ID: D3391-025 **Accept** *N900040100* **Setup Start** *NS1*

Revision ID:

Item Name: Aft Tube Assembly **Stop** *NS2*

Start Date: 10/16/13 **Start Qty:** 1.00 *1* **Cust Item ID:**

Required Date: 10/30/13 **Req'd Qty:** 1.00 *1* **Customer:**

Reference:

Approvals: **Process Plan:** _____ **Date:** _____ **Tooling:** _____ **Date:** _____ **Run Start** *NR1*

QC: _____ **Date:** _____ **SPC (Y/N):** _____ **Date:** _____ **Stop** *NR2*

Sequence ID/ Work Center ID	Operation Description	Set Up/ Run Hours	Tool ID	Tool #	Plan Code	Accept Qty	Reject Qty	Reject Number	Insp. Stamp
270 *270* QC Quality Control	QC5- Inspect part completeness to step on W/O	0.00				1			DAS 05 14-01-21
	Memo	0.00							
280 *280* Packaging Packaging	Identify as per dwg & Stock Location: w/o	0.00	D412-742-043 / B110022			1	0	GL	14/01/22
	Memo	0.00							
290 *290* QC Quality Control	QC21- Final Inspection - Work Order Release	0.00						R	14-01-23
	Memo	0.00							

14-01-22

DQA: _____ Date: _____

NCR: Yes / No

WORK ORDER NON-CONFORMANCE / UPDATE

QA Closed: Date:

Work Order: _____

Part No. _____

NCR No. _____

DISPOSITION

- Rework ☐
- Scrap ☐
- Use-as-is ☐
- Work Order Update ☐

AGAINST DEPARTMENT/PROCESS

- Skid-tube ☐
- Machining ☐
- Thermoforming ☐
- Large Fab ☐
- Crosstube ☐
- Small Fab ☐
- Finishing ☐
- Composite ☐
- Water Jet ☐
- Prod. Eng. Coor. ☐
- Rec/Store/Packaging ☐
- Supplier ☐
- Engineering ☐
- Quality ☐
- Other ☐

Root Cause		Date	Step	Qty	Description of work order update or Non-conformance	Initial Chief Eng	Action Description	Sign & Date	Verification	QC Inspector
Doc/Data	☐									
Equip/Tooling	☐									
Operator	☐									
Material	☐									
Setup	☐									
Other	☐									
Process	☐									
Supplier	☐									
Training	☐									
Unapproved	☐									

FAULT CATEGORY

Landing Gear

- ☐ Bending
- ☐ Centre Not Concentric to O/S
- ☐ Cracks
- ☐ Crushed/Crimped
- ☐ Cuffs
- ☐ Heat Treat
- ☐ Inspection Strip in Tube
- ☐ Ripples in Bend
- ☐ Torque Waves in Extrusion
- ☐ Turning Sequence
- ☐ Wave/Twist in Tube

General

- ☐ Bend
- ☐ BOM/Route
- ☐ Broken/Damaged
- ☐ Burrs
- ☐ Contamination
- ☐ Countersink
- ☐ Cut Too Short
- ☐ Drill Holes
- ☐ Drawing
- ☐ Finish
- ☐ Folio
- ☐ Grain
- ☐ Hardware
- ☐ Inspection Incomplete
- ☐ Instructions Incomplete/Unclear
- ☐ Maintenance
- ☐ Mislabeled
- ☐ Misread
- ☐ Offset
- ☐ Out of Calibration
- ☐ Out of Sequence
- ☐ Outside Dimensions
- ☐ Ovalized
- ☐ Over/Under tolerance
- ☐ Part Incorrect
- ☐ Part Lost/Missing
- ☐ Part Moved
- ☐ Positioned Wrong
- ☐ Power Loss/Surge
- ☐ Pressure/Forced
- ☐ Temperature/Cure
- ☐ Weld
- ☐ Wrong Stock Pulled
- ☐ Other _____

Picklist Print

October-16-13 10:34:43 AM

4

Work Order ID: 108348 *108348*

Parent Item: D3391-025 *D3391-025*

Parent Item Name: Aft Tube Assembly

Start Date: 10/16/13 **Required Date:** 10/30/13

Start Qty: 1.00 **Required Qty:** 1.00

Comments:
IPP Rev B 06-02-07 ECN773 dwg rev. D EC
IPP Rev:C 06-03-28 Update Manuf. Instructions JLM
IPP rev D 07.03.20 revF dwg EC
IPP rev E 07.11.07 rev G dwg ecn 1053p EC verified by: DD
IPP Rev:F 07-11-13 ECN 1056 DD verified by: EC
IPP Rev:G 08-09-10 revH as per dwg DD verified by:EC IPP Rev:H
11.11.14 AS PER REV.I DD verified by:JLM

Component Item ID/ Item Name	Replacement Item ID	Mfg/ Purch	Bin Item	Primary Location	Last Location	Route Seq ID	Unit of Measure	Qty on Hand	Qty per Kit	Total Qty	Qty Issued	Date Issued	Status
D4095-047		Manufactured	No			260	Each	16.0000	1	1			
D4095-047									**				
Wearpad Assembly													

Location	Loc Qty	Loc Code	
FP001	16		
101069	1		
102241	9		X1
103052	6		

Component Item ID/ Item Name	Replacement Item ID	Mfg/ Purch	Bin Item	Primary Location	Last Location	Route Seq ID	Unit of Measure	Qty on Hand	Qty per Kit	Total Qty	Qty Issued	Date Issued	Status
D4095-049		Manufactured	No			260	Each	29.0000	1	1			
D4095-049									**				
Wearpad Assembly													

Location	Loc Qty	Loc Code	
FP001	6		
86246	5		
92731	1		
FP002	23		
102216	16		X1
103031	7		

DQA: _____ Date: _____

NCR: Yes / No

WORK ORDER NON-CONFORMANCE / UPDATE

QA Closed: Date:

Work Order: _____

Part No. _____

NCR No. _____

DISPOSITION

- Rework ☐
- Scrap ☐
- Use-as-is ☐
- Work Order Update ☐

AGAINST DEPARTMENT/PROCESS

- Skid-tube ☐
- Machining ☐
- Thermoforming ☐
- Large Fab ☐
- Crosstube ☐
- Small Fab ☐
- Finishing ☐
- Composite ☐
- Water Jet ☐
- Prod. Eng. Coor. ☐
- Rec/Store/Packaging ☐
- Supplier ☐
- Engineering ☐
- Quality ☐
- Other ☐

Root Cause		Date	Step	Qty	Description of work order update or Non-conformance	Initial Chief Eng	Action Description	Sign & Date	Verification	QC Inspector
Doc/Data	☐									
Equip/Tooling	☐									
Operator	☐									
Material	☐									
Setup	☐									
Other	☐									
Process	☐									
Supplier	☐									
Training	☐									
Unapproved	☐									

FAULT CATEGORY

Landing Gear

- ☐ Bending
- ☐ Centre Not Concentric to O/S
- ☐ Cracks
- ☐ Crushed/Crimped
- ☐ Cuffs
- ☐ Heat Treat
- ☐ Inspection Strip in Tube
- ☐ Ripples in Bend
- ☐ Torque Waves in Extrusion
- ☐ Turning Sequence
- ☐ Wave/Twist in Tube

General

- ☐ Bend
- ☐ BOM/Route
- ☐ Broken/Damaged
- ☐ Burrs
- ☐ Contamination
- ☐ Countersink
- ☐ Cut Too Short
- ☐ Drill Holes
- ☐ Drawing
- ☐ Finish
- ☐ Folio
- ☐ Grain
- ☐ Hardware
- ☐ Inspection Incomplete
- ☐ Instructions Incomplete/Unclear
- ☐ Maintenance
- ☐ Mislabeled
- ☐ Misread
- ☐ Offset
- ☐ Out of Calibration
- ☐ Out of Sequence
- ☐ Outside Dimensions
- ☐ Ovalized
- ☐ Over/Under tolerance
- ☐ Part Incorrect
- ☐ Part Lost/Missing
- ☐ Part Moved
- ☐ Positioned Wrong
- ☐ Power Loss/Surge
- ☐ Pressure/Forced
- ☐ Temperature/Cure
- ☐ Weld
- ☐ Wrong Stock Pulled
- ☐ Other _____

Picklist Print

October-16-13 10:34:43 AM

Work Order ID: 108348 *108348*

Parent Item: D3391-025 *D3391-025*

Parent Item Name: Aft Tube Assembly

Start Date: 10/16/13 **Required Date:** 10/30/13

Start Qty: 1.00 **Required Qty:** 1.00

D6014-090	Manufactured	No		100	Each	89.0000	1	1

D6014-090

ALUMINUM EXTRUSION **

Location	Loc Qty	Loc Code	
LG	72		
86063	72		1 mam. 2 13/10/17
LG015	17		
79742	17		

D3670-4-200	Manufactured	No		230	Each	354.0000	4	4

D3670-4-200

Bushing **

DC 13/11/21

Location	Loc Qty	Loc Code	
FG	10		
87709	10		
LG	189		
101814	1		
102269	44		
103078	4		
103880	60		
96240	80		
LG001	115		
104855	94		4
78606	2		
81972	4		
88580	15		
LG005	40		
80360	40		

DQA: _____ Date: _____

NCR: Yes / No

WORK ORDER NON-CONFORMANCE / UPDATE

QA Closed: Date:

Work Order: _____

Part No. _____

NCR No. _____

DISPOSITION

- Rework ☐
- Scrap ☐
- Use-as-is ☐
- Work Order Update ☐

AGAINST DEPARTMENT/PROCESS

- Skid-tube ☐
- Machining ☐
- Thermoforming ☐
- Large Fab ☐
- Crosstube ☐
- Small Fab ☐
- Finishing ☐
- Composite ☐
- Water Jet ☐
- Prod. Eng. Coor. ☐
- Rec/Store/Packaging ☐
- Supplier ☐
- Engineering ☐
- Quality ☐
- Other ☐

Root Cause	Date	Step	Qty	Description of work order update or Non-conformance	Initial Chief Eng	Action Description	Sign & Date	Verification	QC Inspector
Doc/Data ☐									
Equip/Tooling ☐									
Operator ☐									
Material ☐									
Setup ☐									
Other ☐									
Process ☐									
Supplier ☐									
Training ☐									
Unapproved ☐									

FAULT CATEGORY

Landing Gear

- ☐ Bending
- ☐ Centre Not Concentric to O/S
- ☐ Cracks
- ☐ Crushed/Crimped
- ☐ Cuffs
- ☐ Heat Treat
- ☐ Inspection Strip in Tube
- ☐ Ripples in Bend
- ☐ Torque Waves in Extrusion
- ☐ Turning Sequence
- ☐ Wave/Twist in Tube

General

- ☐ Bend
- ☐ BOM/Route
- ☐ Broken/Damaged
- ☐ Burrs
- ☐ Contamination
- ☐ Countersink
- ☐ Cut Too Short
- ☐ Drill Holes
- ☐ Drawing
- ☐ Finish
- ☐ Folio
- ☐ Grain
- ☐ Hardware
- ☐ Inspection Incomplete
- ☐ Instructions Incomplete/Unclear
- ☐ Maintenance
- ☐ Mislabeled
- ☐ Misread
- ☐ Offset
- ☐ Out of Calibration
- ☐ Out of Sequence
- ☐ Outside Dimensions
- ☐ Ovalized
- ☐ Over/Under tolerance
- ☐ Part Incorrect
- ☐ Part Lost/Missing
- ☐ Part Moved
- ☐ Positioned Wrong
- ☐ Power Loss/Surge
- ☐ Pressure/Forced
- ☐ Temperature/Cure
- ☐ Weld
- ☐ Wrong Stock Pulled
- ☐ Other

_____

_____

_____

Picklist Print

October-16-13 10:34:43 AM

Work Order ID: 108348 *108348*

Parent Item: D3391-025 *D3391-025*

Parent Item Name: Aft Tube Assembly

Start Date: 10/16/13 **Required Date:** 10/30/13

Start Qty: 1.00 **Required Qty:** 1.00

D2646	Manufactured	No		270	Each	59.0000	1	1

D2646

Aft Cap

**

ll 10/12/18

Location	Loc Qty	Loc Code	
FG	4	B107857	x1
85848	2		
90495	2		
FP001	55		
103056	6		
103306	20		
62678	5		
68280	5		
70945	1		
71070	2		
73294	1		
73825	2		
79562	2		
85443	2		
85848	2		
91189	5		
93661	2		

DQA: _____ Date: _____

NCR: Yes / No

WORK ORDER NON-CONFORMANCE / UPDATE

QA Closed: Date:

Work Order: _____

Part No. _____

NCR No. _____

DISPOSITION

- Rework ☐
- Scrap ☐
- Use-as-is ☐
- Work Order Update ☐

AGAINST DEPARTMENT/PROCESS

- Skid-tube ☐
- Machining ☐
- Thermoforming ☐
- Large Fab ☐
- Crosstube ☐
- Small Fab ☐
- Finishing ☐
- Composite ☐
- Water Jet ☐
- Prod. Eng. Coor. ☐
- Rec/Store/Packaging ☐
- Supplier ☐
- Engineering ☐
- Quality ☐
- Other ☐

Root Cause		Date	Step	Qty	Description of work order update or Non-conformance	Initial Chief Eng	Action Description	Sign & Date	Verification	QC Inspector
Doc/Data	☐									
Equip/Tooling	☐									
Operator	☐									
Material	☐									
Setup	☐									
Other	☐									
Process	☐									
Supplier	☐									
Training	☐									
Unapproved	☐									

FAULT CATEGORY

Landing Gear

- ☐ Bending
- ☐ Centre Not Concentric to O/S
- ☐ Cracks
- ☐ Crushed/Crimped
- ☐ Cuffs
- ☐ Heat Treat
- ☐ Inspection Strip in Tube
- ☐ Ripples in Bend
- ☐ Torque Waves in Extrusion
- ☐ Turning Sequence
- ☐ Wave/Twist in Tube

General

- ☐ Bend
- ☐ BOM/Route
- ☐ Broken/Damaged
- ☐ Burrs
- ☐ Contamination
- ☐ Countersink
- ☐ Cut Too Short
- ☐ Drill Holes
- ☐ Drawing
- ☐ Finish
- ☐ Folio
- ☐ Grain
- ☐ Hardware
- ☐ Inspection Incomplete
- ☐ Instructions Incomplete/Unclear
- ☐ Maintenance
- ☐ Mislabeled
- ☐ Misread
- ☐ Offset
- ☐ Out of Calibration
- ☐ Out of Sequence
- ☐ Outside Dimensions
- ☐ Ovalized
- ☐ Over/Under tolerance
- ☐ Part Incorrect
- ☐ Part Lost/Missing
- ☐ Part Moved
- ☐ Positioned Wrong
- ☐ Power Loss/Surge
- ☐ Pressure/Forced
- ☐ Temperature/Cure
- ☐ Weld
- ☐ Wrong Stock Pulled
- ☐ Other

_____

_____

_____

Picklist Print

October-16-13 10:34:43 AM

Work Order ID: 108348 *108348*

Parent Item: D3391-025 *D3391-025*

Parent Item Name: Aft Tube Assembly

Start Date: 10/16/13 **Required Date:** 10/30/13

Start Qty: 1.00 **Required Qty:** 1.00

D3672-1	Manufactured	No		270	Each	1,377.000	2	2

D3672-1

Phenolic Washer

** 13/12/18

Location	Loc Qty	Loc Code	
FG	10		
85222	10		
ST061	366		
83608	3		
91325	11		
99099	352		
ST062	1001		x 2
103845	461		
91325	13		
93886	527		

ALS4-1032-130	Purchased	No		260	Each	3,676.000	14	14

ALS4-1032-130

Rivnut

** 13/12/18

Location	Loc Qty	Loc Code	
FP001	389		
119084	116		
120671	89		
120807	36		
120837	8		
121269	140		
ST279	40		
124080	40		
st510	1247		
124163	160		
M126109	1087		
st555	2000		
M127028	2000		x 14

DQA: _____ Date: _____

NCR: Yes / No

WORK ORDER NON-CONFORMANCE / UPDATE

QA Closed: Date:

Work Order: _____

Part No. _____

NCR No. _____

DISPOSITION

- Rework ☐
- Scrap ☐
- Use-as-is ☐
- Work Order Update ☐

AGAINST DEPARTMENT/PROCESS

- Skid-tube ☐
- Machining ☐
- Thermoforming ☐
- Large Fab ☐
- Crosstube ☐
- Small Fab ☐
- Finishing ☐
- Composite ☐
- Water Jet ☐
- Prod. Eng. Coor. ☐
- Rec/Store/Packaging ☐
- Supplier ☐
- Engineering ☐
- Quality ☐
- Other ☐

Root Cause		Date	Step	Qty	Description of work order update or Non-conformance	Initial Chief Eng	Action Description	Sign & Date	Verification	QC Inspector
Doc/Data	☐									
Equip/Tooling	☐									
Operator	☐									
Material	☐									
Setup	☐									
Other	☐									
Process	☐									
Supplier	☐									
Training	☐									
Unapproved	☐									

FAULT CATEGORY

Landing Gear

- ☐ Bending
- ☐ Centre Not Concentric to O/S
- ☐ Cracks
- ☐ Crushed/Crimped
- ☐ Cuffs
- ☐ Heat Treat
- ☐ Inspection Strip in Tube
- ☐ Ripples in Bend
- ☐ Torque Waves in Extrusion
- ☐ Turning Sequence
- ☐ Wave/Twist in Tube

General

- ☐ Bend
- ☐ BOM/Route
- ☐ Broken/Damaged
- ☐ Burrs
- ☐ Contamination
- ☐ Countersink
- ☐ Cut Too Short
- ☐ Drill Holes
- ☐ Drawing
- ☐ Finish
- ☐ Folio
- ☐ Grain
- ☐ Hardware
- ☐ Inspection Incomplete
- ☐ Instructions Incomplete/Unclear
- ☐ Maintenance
- ☐ Mislabeled
- ☐ Misread
- ☐ Offset
- ☐ Out of Calibration
- ☐ Out of Sequence
- ☐ Outside Dimensions
- ☐ Ovalized
- ☐ Over/Under tolerance
- ☐ Part Incorrect
- ☐ Part Lost/Missing
- ☐ Part Moved
- ☐ Positioned Wrong
- ☐ Power Loss/Surge
- ☐ Pressure/Forced
- ☐ Temperature/Cure
- ☐ Weld
- ☐ Wrong Stock Pulled
- ☐ Other

_____

_____

_____

Picklist Print

October-16-13 10:34:43 AM

Work Order ID: 108348 **108348**

Parent Item: D3391-025 **D3391-025**

Parent Item Name: Aft Tube Assembly

Start Date: 10/16/13 **Required Date:** 10/30/13

Start Qty: 1.00 **Required Qty:** 1.00

ALS4-1032-225	Purchased	No		270	Each	1,543.000	8	8	
ALS4-1032-225							**		dll 13/12/18
Rivnut									

Location		Loc Qty	Loc Code	
ST280		743		
	M125954	20		
	M127028	723		
st555		800		
	M127092	800		x8

AN3C4A	Purchased	No		270	Each	2,966.000	6	6	
AN3C4A							**		dll 13/12/18
Bolt									

Location		Loc Qty	Loc Code	
FG		20		
	122814	20		
ST512		2946		
	125388	2376		x6
	M126765	570		

AN3C5A	Purchased	No		270	Each	294.0000	4	4	
AN3C5A							**		dll 13/12/18
Bolt									

Location		Loc Qty	Loc Code	
FG		5	M127290	x4
	122800	5		
ST512		289		
	125388	289		

DQA: _____ Date: _____

NCR: Yes / No

WORK ORDER NON-CONFORMANCE / UPDATE

QA Closed: Date:

Work Order: _____

Part No. _____

NCR No. _____

DISPOSITION

Rework ☐
Scrap ☐
Use-as-is ☐
Work Order Update ☐

AGAINST DEPARTMENT/PROCESS

Skid-tube ☐ Crosstube ☐ Water Jet ☐ Engineering ☐
Machining ☐ Small Fab ☐ Prod. Eng. Coor. ☐ Quality ☐
Thermoforming ☐ Finishing ☐ Rec/Store/Packaging ☐ Other ☐
Large Fab ☐ Composite ☐ Supplier ☐ ☐

Root Cause		Date	Step	Qty	Description of work order update or Non-conformance	Initial Chief Eng	Action Description	Sign & Date	Verification	QC Inspector
Doc/Data	☐									
Equip/Tooling	☐									
Operator	☐									
Material	☐									
Setup	☐									
Other	☐									
Process	☐									
Supplier	☐									
Training	☐									
Unapproved	☐									

FAULT CATEGORY

Landing Gear

☐ Bending
☐ Centre Not Concentric to O/S
☐ Cracks
☐ Crushed/Crimped
☐ Cuffs
☐ Heat Treat
☐ Inspection Strip in Tube
☐ Ripples in Bend
☐ Torque Waves in Extrusion
☐ Turning Sequence
☐ Wave/Twist in Tube

General

☐ Bend
☐ BOM/Route
☐ Broken/Damaged
☐ Burrs
☐ Contamination
☐ Countersink
☐ Cut Too Short
☐ Drill Holes
☐ Drawing
☐ Finish
☐ Folio

☐ Grain
☐ Hardware
☐ Inspection Incomplete
☐ Instructions Incomplete/Unclear
☐ Maintenance
☐ Mislabeled
☐ Misread
☐ Offset
☐ Out of Calibration
☐ Out of Sequence
☐ Outside Dimensions

☐ Ovalized
☐ Over/Under tolerance
☐ Part Incorrect
☐ Part Lost/Missing
☐ Part Moved
☐ Positioned Wrong
☐ Power Loss/Surge

☐ Pressure/Forced
☐ Temperature/Cure
☐ Weld
☐ Wrong Stock Pulled

☐ Other

_____
_____
_____

Picklist Print

October-16-13 10:34:43 AM

Work Order ID: 108348 *108348*

Parent Item: D3391-025 *D3391-025*

Parent Item Name: Aft Tube Assembly

Start Date: 10/16/13 **Required Date:** 10/30/13

Start Qty: 1.00 **Required Qty:** 1.00

NAS1149C0332R	Purchased	No		270	Each	9,489.000	10	10

NAS1149C0332R

WASHER

**

10/12/13

Location		Loc Qty	Loc Code	
FP001		264		
	123355	264		
ST292		119		
	123248	18		
	123759	10		
	125268	91		
st510		6000		
	m126319	6000		XLO
ST511		2954		
	125654	2954		
ST517		152		
	122063	26		
	124580	126		

DQA: _____ Date: _____

NCR: Yes / No

WORK ORDER NON-CONFORMANCE / UPDATE

QA Closed: Date:

Work Order: _____

Part No. _____

NCR No. _____

DISPOSITION

- Rework ☐
- Scrap ☐
- Use-as-is ☐
- Work Order Update ☐

AGAINST DEPARTMENT/PROCESS

- Skid-tube ☐
- Machining ☐
- Thermoforming ☐
- Large Fab ☐
- Crosstube ☐
- Small Fab ☐
- Finishing ☐
- Composite ☐
- Water Jet ☐
- Prod. Eng. Coor. ☐
- Rec/Store/Packaging ☐
- Supplier ☐
- Engineering ☐
- Quality ☐
- Other ☐

Root Cause		Date	Step	Qty	Description of work order update or Non-conformance	Initial Chief Eng	Action Description	Sign & Date	Verification	QC Inspector
Doc/Data	☐									
Equip/Tooling	☐									
Operator	☐									
Material	☐									
Setup	☐									
Other	☐									
Process	☐									
Supplier	☐									
Training	☐									
Unapproved	☐									

FAULT CATEGORY

Landing Gear

- ☐ Bending
- ☐ Centre Not Concentric to O/S
- ☐ Cracks
- ☐ Crushed/Crimped
- ☐ Cuffs
- ☐ Heat Treat
- ☐ Inspection Strip in Tube
- ☐ Ripples in Bend
- ☐ Torque Waves in Extrusion
- ☐ Turning Sequence
- ☐ Wave/Twist in Tube

General

- ☐ Bend
- ☐ BOM/Route
- ☐ Broken/Damaged
- ☐ Burrs
- ☐ Contamination
- ☐ Countersink
- ☐ Cut Too Short
- ☐ Drill Holes
- ☐ Drawing
- ☐ Finish
- ☐ Folio
- ☐ Grain
- ☐ Hardware
- ☐ Inspection Incomplete
- ☐ Instructions Incomplete/Unclear
- ☐ Maintenance
- ☐ Mislabeled
- ☐ Misread
- ☐ Offset
- ☐ Out of Calibration
- ☐ Out of Sequence
- ☐ Outside Dimensions
- ☐ Ovalized
- ☐ Over/Under tolerance
- ☐ Part Incorrect
- ☐ Part Lost/Missing
- ☐ Part Moved
- ☐ Positioned Wrong
- ☐ Power Loss/Surge
- ☐ Pressure/Forced
- ☐ Temperature/Cure
- ☐ Weld
- ☐ Wrong Stock Pulled
- ☐ Other

_____

_____

_____

DART AEROSPACE LTD	Work Order:	108348
Description: Float Skidtube (412)	Part Number:	D3391-3
Inspection Dwg: D3391 **Rev:** I		Page 1 of 1

FIRST ARTICLE INSPECTION CHECKLIST

Drawing Dimension	Tolerance	Actual Dimension	Accept	Reject	Method of Inspection	Comments
Lathe Section						
14.000	+/-0.010	14.00	✓		tape	LG-25
3.500	+/-0.010	3.503	✓		vern	CNC-C8
Ø3.200	+/-0.010	3.197	✓		↓	
Ø3.750	+/-0.010	3.750	✓			
30° x 0.060 chamfer	+/-0.010	30° x .060	✓		↓	
88.93	+/-0.030	88.92	✓		tape	LG-25

Measured by:	[signature]	**Date:**	13/10/20
Audited by:	[signature]	**Date:**	13 10 22

HAAS Section						
1.526	+0.000/-0.030	1.570	✓		Vern	CNC-02
7.500	+/-0.010	7.500	✓		"	
27.750	+/-0.010	27.750	✓		M-TAPE	
31.750	+/-0.010	31.750	✓		"	
35.250	+/-0.010	35.250	✓		"	
3.300	+/-0.010	3.299	✓		Vern	
0.200	+/-0.010	.201	✓		"	
3.520	+/-0.010	3.520	✓		mic	104-137
0.687	+0.010/-0.000	.690	✓		Vern	
R0.062	+/-0.010	.062	✓			
Ø0.484	+0.005/-0.001	.487	✓			

Measured by:	SL	**Date:**	13-11-1
Audited by:	DAS 40 9-89	**Date:**	13-11-04

Rev	Date	Change	Revised by	Approved
A	06.04.24	New Issue P/O D3391-015/-025	KJ/JLM	
B	06.06.19	Dwg revision update	KJ/JLM	
C	07.04.20	Ø0.208 dimension removed	KJ/JLM	
D	07.09.06	0.400 dimension removed	KJ/JLM	
E	07.11.23	Dwg Rev. updated	KJ/EC/DD	
F	09.04.27	Dimensions updated per Rev H and NCR09-028	KJ/JLM	
G	09.11.16	Dimension 0.200 removed	KJ	
H	11.06.21	Dimension 44.995 removed	KJ	
I	12.05.15	Dwg Rev updated	KJ	
J	12.05.23	Dimension updated	KJ	
K	12.10.15	88.93 dimension removed	KJ	
L	12.11.28	88.93 dimension added	KJ	

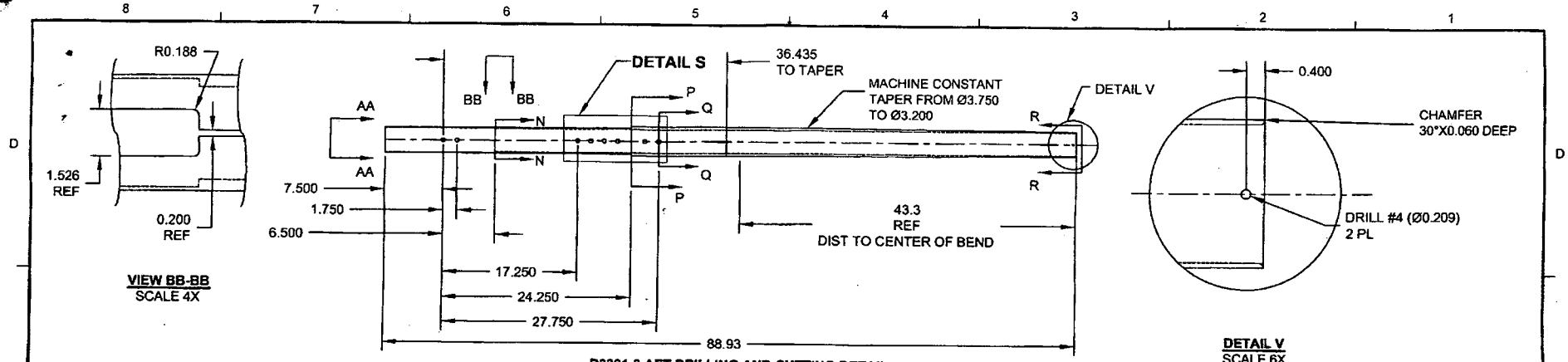

D3391-3 AFT DRILLING AND CUTTING DETAIL
(MAKE FROM D6014-090 SKIDTUBE MATERIAL)

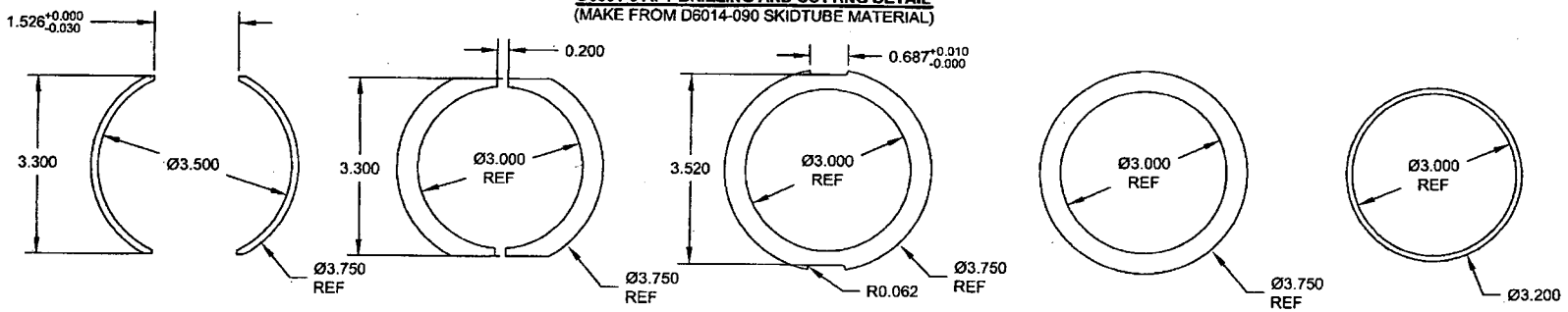

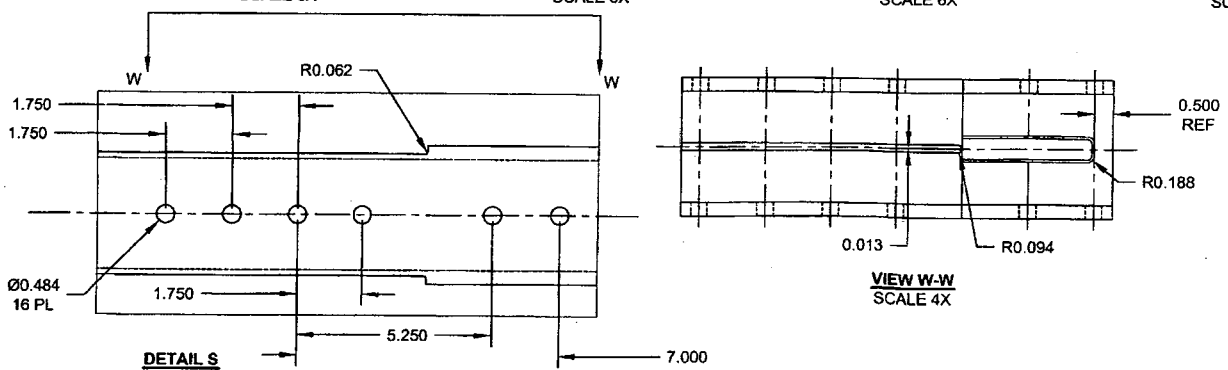

RELEASED
2011-11-04

DESIGN	PH	DART AEROSPACE USA, INC	
DRAWN	XDF	KENT, WA	
CHECKED		DRAWING NO.	REV. I
MFG. APPR.		D3391	SHEET 7 OF 8
APPROVED		TITLE	SCALE
DE APPR.		412 FLOAT SKIDTUBE	NTS
DATE	11.10.13		

COPYRIGHT © 2005 BY DART AEROSPACE USA, INC
THIS DOCUMENT IS PRIVATE AND CONFIDENTIAL AND IS SUPPLIED ON THE EXPRESS CONDITION THAT IT IS NOT TO BE USED FOR ANY PURPOSE OR COPIED OR DISCLOSED TO ANY OTHER PERSON WITHOUT WRITTEN PERMISSION FROM DART AEROSPACE USA, INC.

108348 MCJ
13-10-16

108348

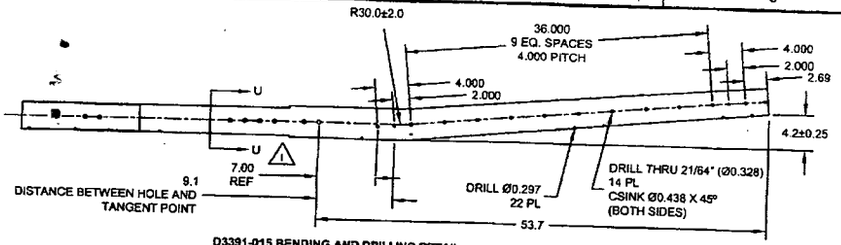

D3391-015 BENDING AND DRILLING DETAIL
(SEE CBORE DETAIL BELOW)

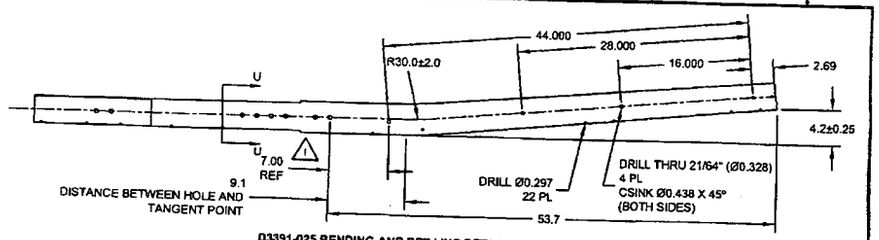

D3391-025 BENDING AND DRILLING DETAIL
(SEE CBORE DETAIL BELOW)

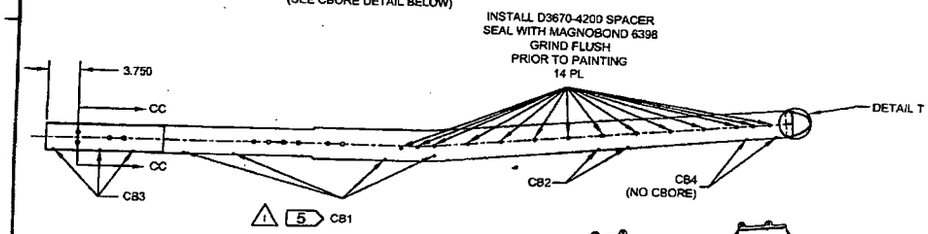

D3391-015 ASSEMBLY AND CBORE DETAIL
(SEE TABLE)

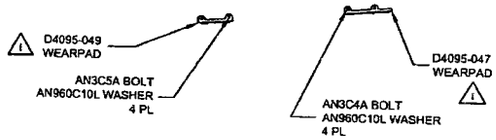

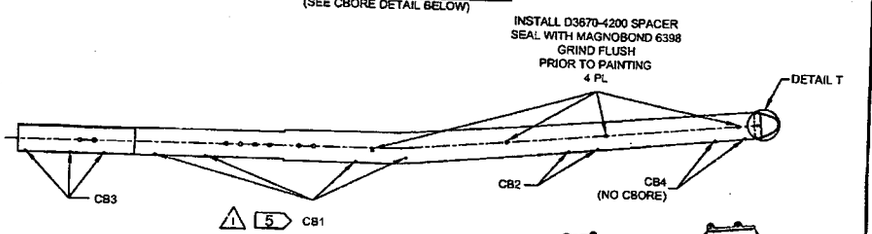

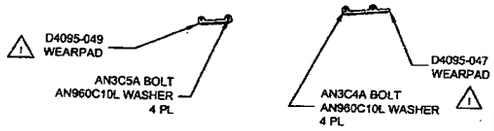

D3391-025 ASSEMBLY AND CBORE DETAIL
(SEE TABLE)

D3391-015/-025 AFT TUBE ASSEMBLY PARTS LIST

QTY - 015	QTY - 025	PART NUMBER	DESCRIPTION
X		D3391-015	AFT TUBE ASSEMBLY
	X	D3391-025	AFT TUBE ASSEMBLY
1	1	D2646	AFT CAP
14	4	D3670-4200	SPACER
2	2	D3672-1	WASHER
1	1	D4095-049	WEARPAD
1	1	D4095-047	WEARPAD
1	1	D6014-090	AFT TUBE
14	14	AELS-1032-130	INSERT
6	6	AELS-1032-225	INSERT
4		ALS4-428-165	INSERT
6	6	AN3C4A	BOLT
4	4	AN3C5A	BOLT
10	10	AN960C10L	WASHER

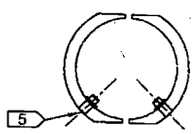

SECTION U-U
SCALE 3X

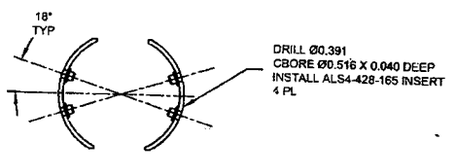

SECTION CC-CC
SCALE 3X

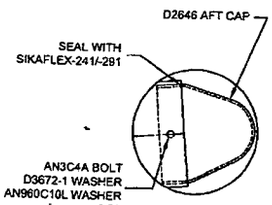

DETAIL T
SCALE 4X

CBORE HOLES MARKED CB1-CB4 AS FOLLOWS AND
INSTALL AELS-1032-XXX AFTER FINISH AS NOTED

HOLES MARKED	QTY D3391-015	QTY D3391-025	CBORE	P/N
CB1	8	8	Ø0.430 X 0.170	AELS-1032-225
CB2	4	4	Ø0.430 X 0.170	AELS-1032-130
CB3	6	6	Ø0.430 X 0.040	AELS-1032-130
CB4	4	4	NONE	AELS-1032-130

RELEASED
2011-11-04

DESIGN	PH	DART AEROSPACE USA, INC
DRAWN	XDF	KENT, WA
CHECKED		DRAWING NO. REV. I
MFG. APPR.		D3391 SHEET 8 OF 8
APPROVED		TITLE SCALE
DE APPR.		412 FLOAT SKIDTUBE NTS
DATE		11.10.13
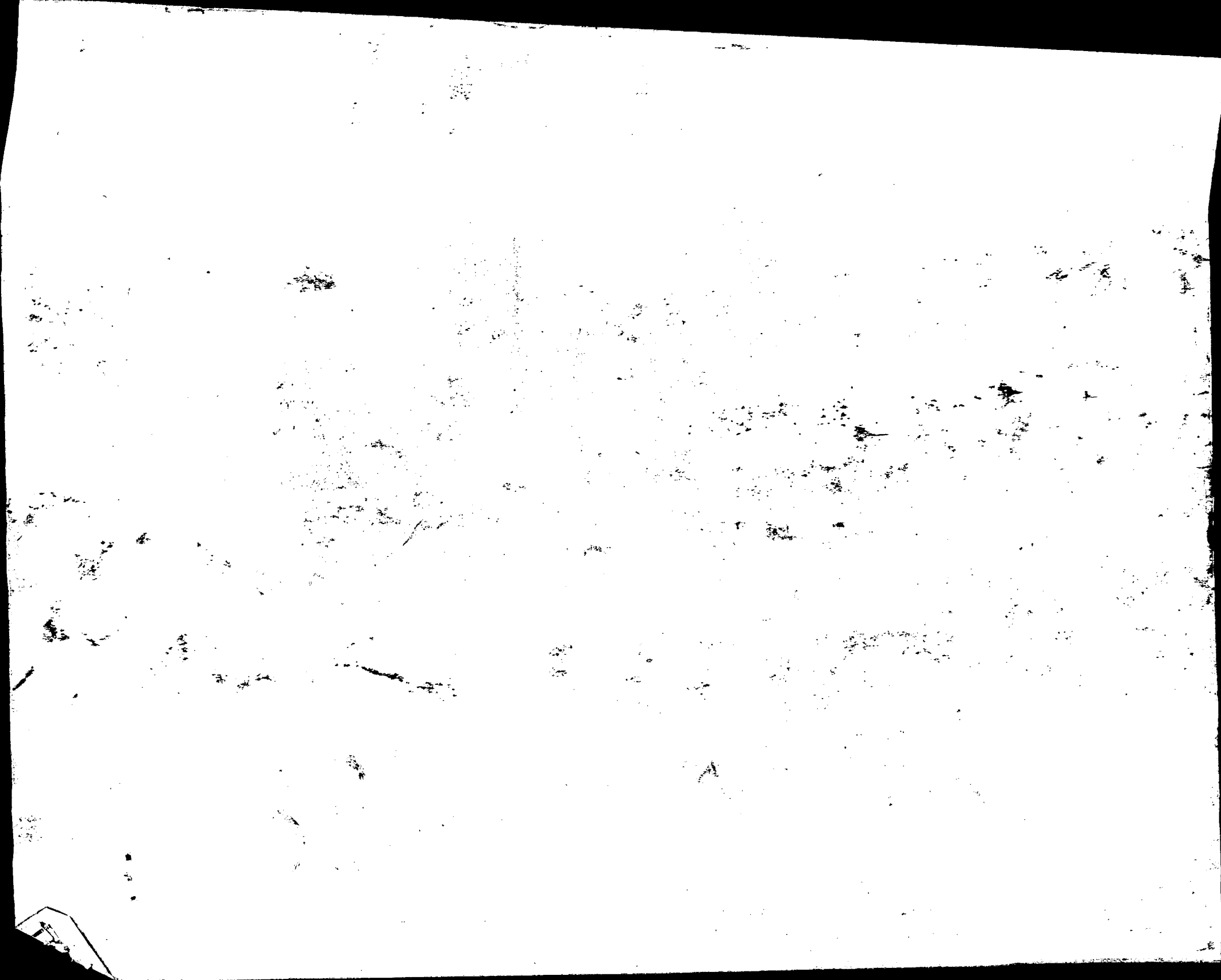
COPYRIGHT © 2005 BY DART AEROSPACE USA, INC
THIS DOCUMENT IS PRIVATE AND CONFIDENTIAL AND IS SUPPLIED ON THE EXPRESS CONDITION THAT IT IS NOT TO BE USED FOR ANY PURPOSE OR COPIED OR COMMUNICATED TO ANY OTHER PERSON WITHOUT WRITTEN PERMISSION FROM DART AEROSPACE USA, INC.